DATASHEET - ETR4-11-W

Timing relay, 1W, 0.05s-60h, on-delayed, 400VAC

Part no.	**ETR4-11-W**
Catalog No.	**031883**
Eaton Catalog No.	**XTTR6A100HS11N**

Powering Business Worldwide™

Delivery program

Product range			ETR4 timing relays
Basic function			Timer relays
Function			On-delayed
			Fixed timing function
Number of changeover contacts			1
Time range			0.05 s - 100 h
Time range			0.05 - 1 s 0.15 - 3 s 0.5 - 10 s 1.5 - 30 s 5 - 100 s 15 - 300 s 1.5 - 30 min 15 - 300 min 1.5 - 30 h 5 - 100 h
Rated operational current			
AC-14			
380 V 400 V 415 V	I_e	A	3
			Value applies starting with release 001.
AC-15			
220 V 230 V 240 V	I_e	A	3
380 V 400 V 415 V	I_e	A	3
			Value applies starting with release 001.
Voltage range	U_{LN}	V	400 V AC, 50/60 Hz
Width		mm	22.5

Terminal marking according to EN 50042

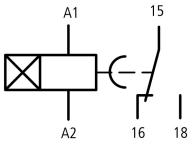

Technical data

General

Standards			Standard IEC/EN 61812 VDE 0435
Lifespan, mechanical			
AC operated	Operations	x 10^6	30
DC operated	Operations	x 10^6	30
Climatic proofing			Damp heat, constant, to IEC 60068-2-78 Damp heat, cyclic, to IEC 60068-2-30
Ambient temperature			
Ambient temperature, storage		°C	- 45 - + 85
Open		°C	-25 - +60
Enclosed		°C	- 25 - + 45
Mounting position			As required
Mechanical shock resistance (IEC/EN 60068-2-27)			
Half-sinusoidal shock, 20 ms		g	
Make contact		g	4
Degree of protection			

Terminals			IP20
Weight		kg	0.1
Terminal capacities		mm^2	
Solid		mm^2	1 x (0.5 - 2.5) 2 x (0.5 - 1.5)
Flexible with ferrule		mm^2	1 x (0.5 - 2.5) 2 x (0.5 - 1.5)
Solid or stranded		AWG	1 x (20 - 14)

Contacts

Rated impulse withstand voltage	U_{imp}	V AC	6000
			Value applies starting with release 001.
Overvoltage category/pollution degree			III/2
Rated insulation voltage	U_i	V AC	600
			Value applies starting with release 001.
Rated operational voltage	U_e	V AC	440
			Value applies starting with release 001.
Safe isolation to EN 61140			
between coil and auxiliary contacts		V AC	250
between the auxiliary contacts		V AC	250
Making capacity			
AC-14 cos φ = 0.3 400 V		A	48
AC-15 cos φ = 0.3 220 V		A	50
DC-11 L/R - 40 ms		x I_e	1.1
Breaking capacity			
AC-14 cos φ = 0.3 440 V		A	3
AC-15 cos φ = 0.3 220 V		A	3
DC-11 L/R - 40 ms		x I_e	1.1
Rated operational current	I_e	A	
AC-14	I_e		
380 V 400 V 415 V	I_e	A	3
			Value applies starting with release 001.
AC--14			
440 V	I_e	A	3
AC-15			
220 V 230 V 240 V	I_e	A	3
DC-11			
Note			Making and breaking conditions to DC13, time constant as stated
L/R max. 15 ms		A	
24 V	I_e	A	1.5
L/R max. 50 ms		A	1.2
Conv. thermal current	I_{th}	A	6
Short-circuit rating without welding			
Note			When supplied directly from mains or transformer > 1000 VA
Max. fuse, make contacts		A gG/gL	6
Max. fuse, break contacts		A gG/gL	6
Max. overcurrent protective device, 220/230 V		Type	FAZ-B4/1-HI

Magnet systems

Rated operational voltage	U_e	V	
AC			400
Power consumption			
Pick-up AC		VA	0.5
Sealing AC		VA	0.5
Duty factor		% DF	100
Maximum operating frequency		Ops/h	4000
Minimum command time			

AC		ms	50
Repetition accuracy (deviation)		%	≦ 0.5
Recovery time (after 100% time delay)		ms	70
Contact changeover time	t_u	ms	4

Electromagnetic compatibility (EMC)

Electrostatic discharge (ESD)			
applied standard			IEC/EN 61000-4-2
Air discharge		kV	8
Contact discharge		kV	6
Electromagnetic fields (RFI)			
applied standard			IEC/EN 61000-4-3
		V/m	80 - 1000 MHz: 10 1.4 - 2 GHz: 3 2.0 - 2.7 GHz: 1
Radio interference suppression			EN 55011, Class B (conducted) EN 55011, Class B (radiated)
Burst		kV	Supply cables: 2 Signal cables: 1 according to IEC/EN 61000-4-4
power pulses (Surge)			2 kV (symmetrical) 4 kV (asymmetrical) according to IEC/EN 61000-4-5
Immunity to line-conducted interference to (IEC/EN 61000-4-6)		V	10

Design verification as per IEC/EN 61439

Technical data for design verification			
Rated operational current for specified heat dissipation	I_n	A	6
Heat dissipation per pole, current-dependent	P_{vid}	W	1.4
Equipment heat dissipation, current-dependent	P_{vid}	W	0
Static heat dissipation, non-current-dependent	P_{vs}	W	0.5
Heat dissipation capacity	P_{diss}	W	0
Operating ambient temperature min.		°C	-25
Operating ambient temperature max.		°C	60
IEC/EN 61439 design verification			
10.2 Strength of materials and parts			
10.2.2 Corrosion resistance			Meets the product standard's requirements.
10.2.3.1 Verification of thermal stability of enclosures			Meets the product standard's requirements.
10.2.3.2 Verification of resistance of insulating materials to normal heat			Meets the product standard's requirements.
10.2.3.3 Verification of resistance of insulating materials to abnormal heat and fire due to internal electric effects			Meets the product standard's requirements.
10.2.4 Resistance to ultra-violet (UV) radiation			Meets the product standard's requirements.
10.2.5 Lifting			Does not apply, since the entire switchgear needs to be evaluated.
10.2.6 Mechanical impact			Does not apply, since the entire switchgear needs to be evaluated.
10.2.7 Inscriptions			Meets the product standard's requirements.
10.3 Degree of protection of ASSEMBLIES			Does not apply, since the entire switchgear needs to be evaluated.
10.4 Clearances and creepage distances			Meets the product standard's requirements.
10.5 Protection against electric shock			Does not apply, since the entire switchgear needs to be evaluated.
10.6 Incorporation of switching devices and components			Does not apply, since the entire switchgear needs to be evaluated.
10.7 Internal electrical circuits and connections			Is the panel builder's responsibility.
10.8 Connections for external conductors			Is the panel builder's responsibility.
10.9 Insulation properties			
10.9.2 Power-frequency electric strength			Is the panel builder's responsibility.
10.9.3 Impulse withstand voltage			Is the panel builder's responsibility.
10.9.4 Testing of enclosures made of insulating material			Is the panel builder's responsibility.
10.10 Temperature rise			The panel builder is responsible for the temperature rise calculation. Eaton will provide heat dissipation data for the devices.
10.11 Short-circuit rating			Is the panel builder's responsibility. The specifications for the switchgear must be observed.
10.12 Electromagnetic compatibility			Is the panel builder's responsibility. The specifications for the switchgear must be observed.

10.13 Mechanical function			The device meets the requirements, provided the information in the instruction leaflet (IL) is observed.

Technical data ETIM 7.0

Relays (EG000019) / Timer relay (EC001439)

Electric engineering, automation, process control engineering / Low-voltage switch technology / Relay and socket / Timed relay (ecl@ss10.0.1-27-37-16-05 [AKF092013])

Type of electric connection			Screw connection
Function delay-on energization			Yes
Function delay on de-energization			No
Function floating contact on energization			No
Function floating contact on de-energization			No
Function star-delta			No
Function pulse shaping			No
Function flashing, starting with pause, fixed time			No
Function flashing, starting with pulse, fixed time			No
Clock function, starting with pause, variable			No
Clock function, starting with pulse, variable			No
With plug-in socket			No
Remote operation possible			No
Suitable for remote control			No
Pluggable on auxiliary contact block			No
Rated control supply voltage Us at AC 50HZ		V	400 - 400
Rated control supply voltage Us at AC 60HZ		V	400 - 400
Rated control supply voltage Us at DC		V	0 - 0
Voltage type for actuating			AC
Nominal current		A	3
Time range		s	0.05 - 360000
Number of outputs, undelayed, normally closed contact			0
Number of outputs, undelayed, normally open contact			0
Number of outputs, undelayed, change-over contact			0
Number of outputs, delayed, normally closed contact			0
Number of outputs, delayed, normally open contact			0
Number of outputs, delayed, change-over contact			1
Outputs, reversible delayed/undelayed			No
With semiconductor output			No
Suitable for DIN rail (top hat rail) mounting			Yes
Suitable for front mounting			No
Width		mm	23
Height		mm	83
Depth		mm	103

Characteristics

Flow diagram for timing functions

LED legend

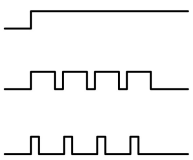

Time not running, contact 15 – 18 closed

Time running, contact 15 – 18 closed

Time running, contact 15 – 18 not closed

① A2/A1 linked
② A2/A1 not linked

11 On-delayed

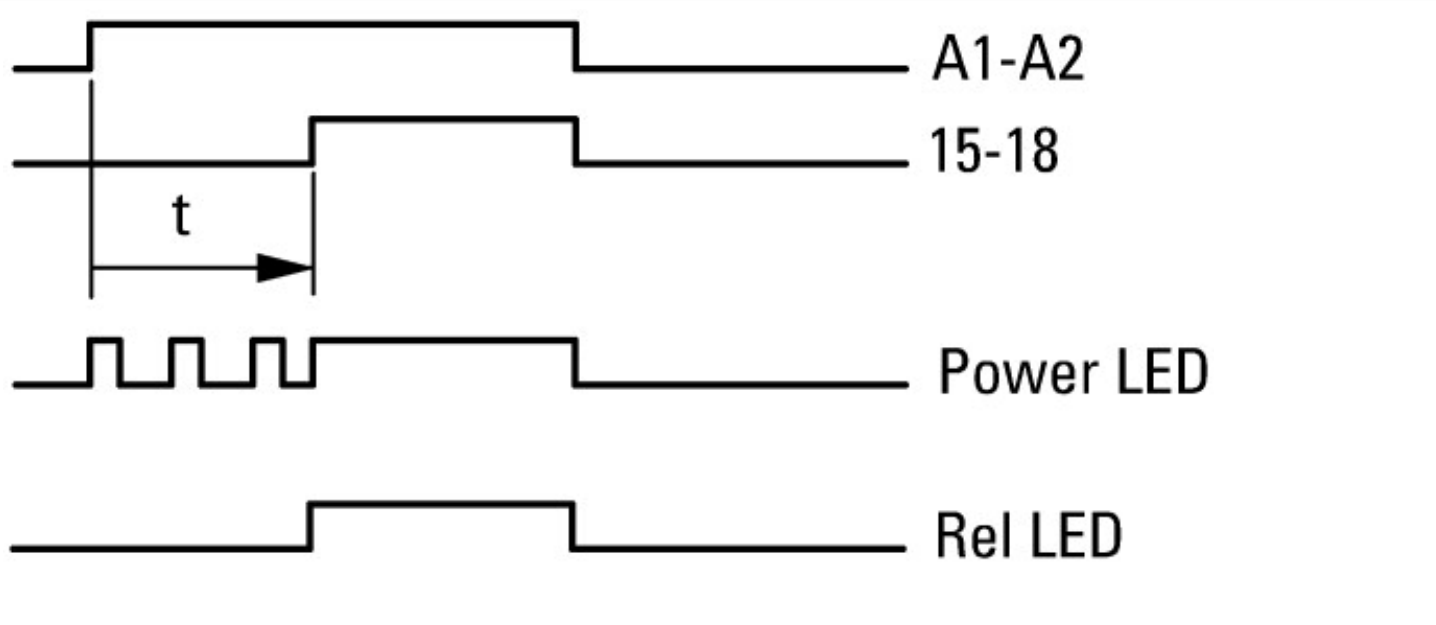
A1-A2
15-18
t
Power LED
Rel LED

Dimensions

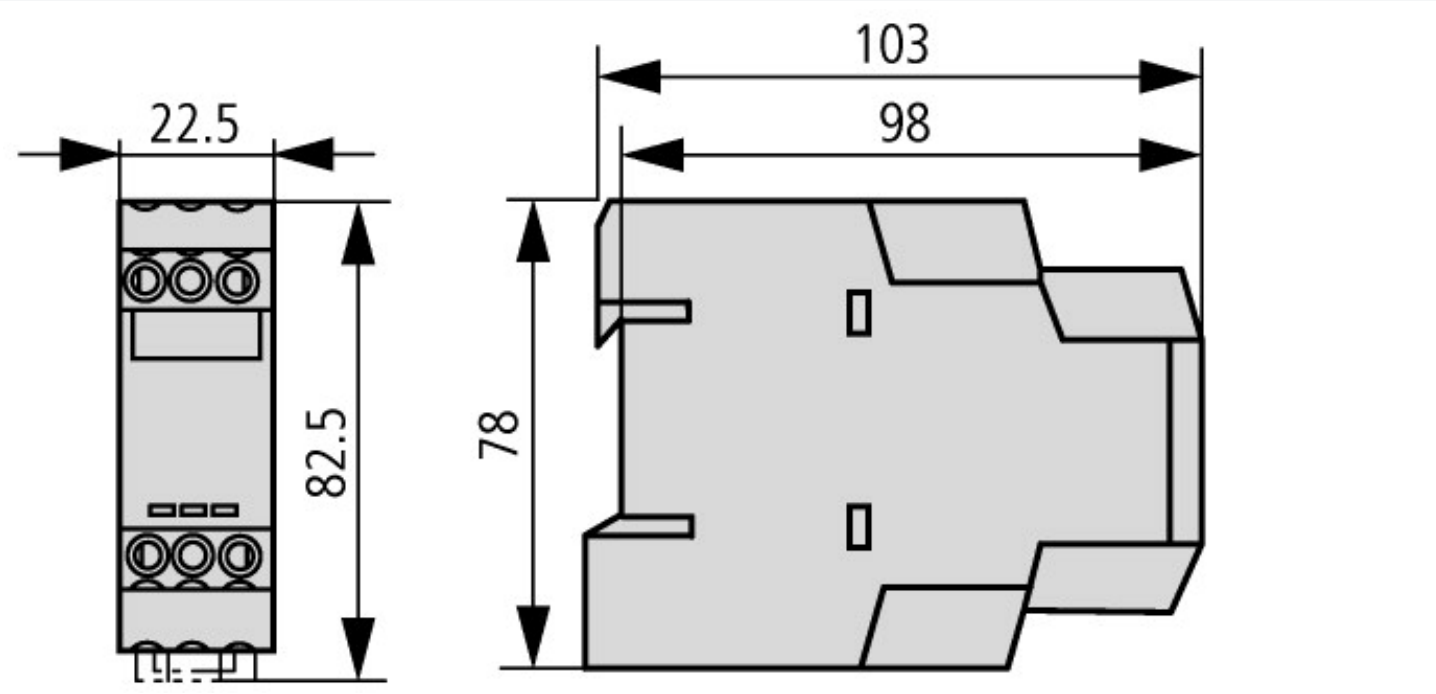
22.5
103
98
82.5
78

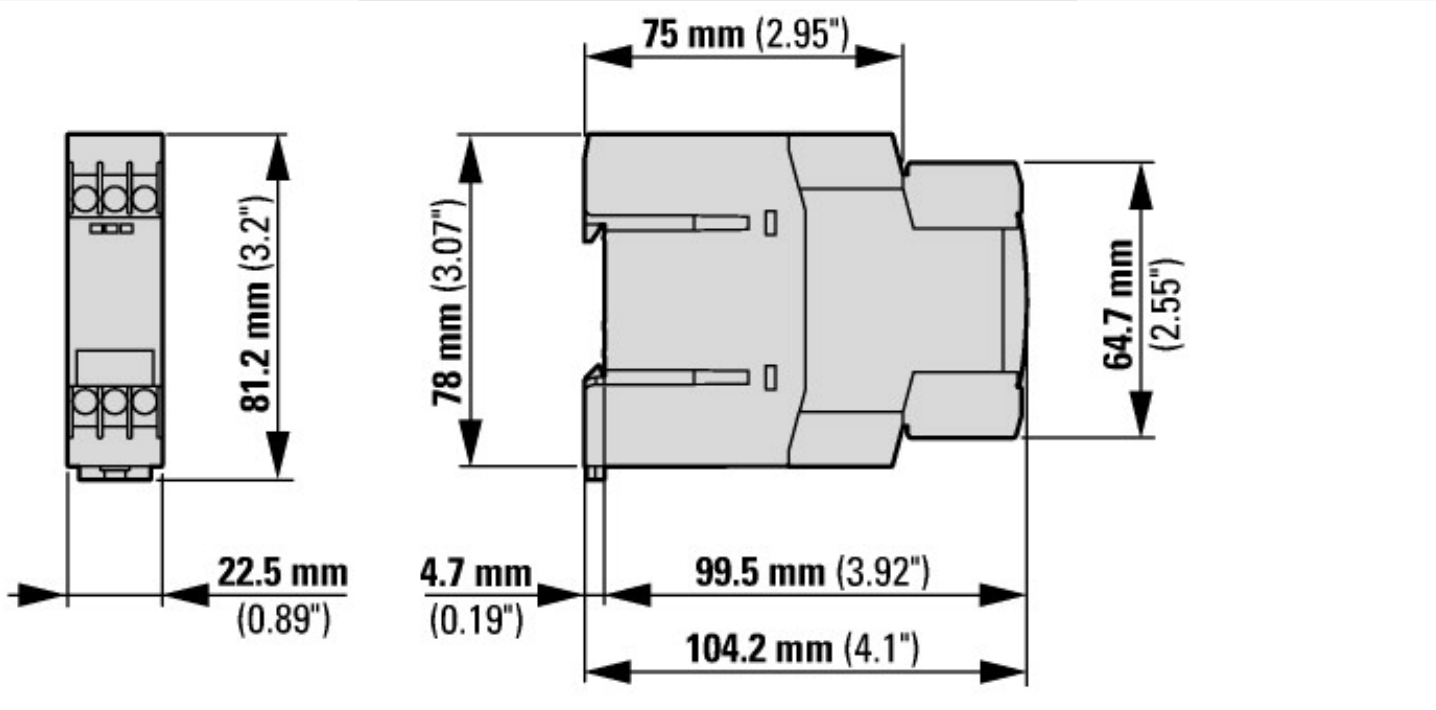
75 mm (2.95")
81.2 mm (3.2")
78 mm (3.07")
64.7 mm
(2.55")
22.5 mm
(0.89")
4.7 mm
(0.19")
99.5 mm (3.92")
104.2 mm (4.1")

Applies to release 001 and higher

Additional product information (links)

IL049003ZU Timing relay	
IL049003ZU Timing relay	ftp://ftp.moeller.net/DOCUMENTATION/AWA_INSTRUCTIONS/IL049003ZU2018_05.pdf

© 12/2018 by Eaton Industries GmbH