DATASHEET - LS-11/P

Position switch, 1N/O+1N/C, roller plunger

Part no.	**LS-11/P**
Catalog No.	**266112**
Eaton Catalog No.	**LS-11/P**
EL-Nummer (Norway)	**4356123**

Delivery program

Basic function			Position switches Safety position switches
Part group reference			LS(M)-…
Product range			Roller plunger
Degree of Protection			IP66, IP67
Features			Complete unit
Ambient temperature		°C	-25 - +70
Design			EN 50047 Form C
Contacts			
N/O = Normally open			1 N/O
N/C = Normally closed			1 NC ⊖
Notes			⊖ = safety function, by positive opening to IEC/EN 60947-5-1
Contact sequence			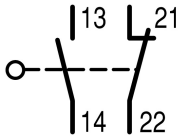
Contact travel■ = Contact closed□ = Contact open			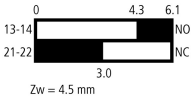
Positive opening (ZW)			yes
Colour			
Enclosure covers			Yellow
Enclosure covers			
Housing			Insulated material
Connection type			Cage Clamp
Notes			Cage-Clamp is a registered trademark of Wago Kontakttechnik, 32432 Minden, Germany. Accessories for the Cage-Clamp terminals from Wago:power comb, gray, Wago Article No. 264-402

Notes The operating head can be rotated at 90° intervals to adapt to the specified approach direction.

Technical data

General

Standards			IEC/EN 60947
Climatic proofing			Damp heat, constant, to IEC 60068-2-78; damp heat, cyclical, to IEC 60068-2-30
Ambient temperature		°C	-25 - +70
Mounting position			As required
Degree of Protection			IP66, IP67

Terminal capacities		mm^2	
Solid		mm^2	1 x (0.5 - 2.5)
Flexible with ferrule		mm^2	1 x (0.5 - 1.5)

Contacts/switching capacity

Rated impulse withstand voltage	U_{imp}	V AC	4000
Rated insulation voltage	U_i	V	400
Overvoltage category/pollution degree			III/3
Rated operational current	I_e	A	
AC-15			
24 V	I_e	A	6
220 V 230 V 240 V	I_e	A	6
380 V 400 V 415 V	I_e	A	4
DC-13			
24 V	I_e	A	3
110 V	I_e	A	0.6
220 V	I_e	A	0.3
Control circuit reliability			
at 24 V DC/5 mA	H_F	Fault probability	$< 10^{-7}$, < 1 fault in 107 operations
at 5 V DC/1 mA	H_F	Fault probability	$< 10^{-6}$, < 1 failure at 5 x 10^6 operations
Supply frequency		Hz	max. 400
Short-circuit rating to IEC/EN 60947-5-1			
max. fuse		A gG/gL	6
Repetition accuracy		mm	0.15
Rated conditional short-circuit current		kA	1

Mechanical variables

Lifespan, mechanical	Operations	x 10^6	8
Mechanical shock resistance (half-sinusoidal shock, 20 ms)			
Standard-action contact		g	25
Operating frequency	Operations/h		≦ 6000

Actuation

Mechanical			
Actuating force at beginning/end of stroke		N	1.0/8.0
Actuating torque of rotary drives		Nm	0.2
Max. operating speed with DIN cam		m/s	1/1
Notes			for angle of actuation α = 0°/30°

Design verification as per IEC/EN 61439

Technical data for design verification			
Rated operational current for specified heat dissipation	I_n	A	6
Heat dissipation per pole, current-dependent	P_{vid}	W	0.17
Equipment heat dissipation, current-dependent	P_{vid}	W	0
Static heat dissipation, non-current-dependent	P_{vs}	W	0
Heat dissipation capacity	P_{diss}	W	0
Operating ambient temperature min.		°C	-25
Operating ambient temperature max.		°C	70
IEC/EN 61439 design verification			
10.2 Strength of materials and parts			
10.2.2 Corrosion resistance			Meets the product standard's requirements.
10.2.3.1 Verification of thermal stability of enclosures			Meets the product standard's requirements.
10.2.3.2 Verification of resistance of insulating materials to normal heat			Meets the product standard's requirements.
10.2.3.3 Verification of resistance of insulating materials to abnormal heat and fire due to internal electric effects			Meets the product standard's requirements.
10.2.4 Resistance to ultra-violet (UV) radiation			Meets the product standard's requirements.

10.2.5 Lifting			Does not apply, since the entire switchgear needs to be evaluated.
10.2.6 Mechanical impact			Does not apply, since the entire switchgear needs to be evaluated.
10.2.7 Inscriptions			Meets the product standard's requirements.
10.3 Degree of protection of ASSEMBLIES			Does not apply, since the entire switchgear needs to be evaluated.
10.4 Clearances and creepage distances			Meets the product standard's requirements.
10.5 Protection against electric shock			Does not apply, since the entire switchgear needs to be evaluated.
10.6 Incorporation of switching devices and components			Does not apply, since the entire switchgear needs to be evaluated.
10.7 Internal electrical circuits and connections			Is the panel builder's responsibility.
10.8 Connections for external conductors			Is the panel builder's responsibility.
10.9 Insulation properties			
10.9.2 Power-frequency electric strength			Is the panel builder's responsibility.
10.9.3 Impulse withstand voltage			Is the panel builder's responsibility.
10.9.4 Testing of enclosures made of insulating material			Is the panel builder's responsibility.
10.10 Temperature rise			The panel builder is responsible for the temperature rise calculation. Eaton will provide heat dissipation data for the devices.
10.11 Short-circuit rating			Is the panel builder's responsibility. The specifications for the switchgear must be observed.
10.12 Electromagnetic compatibility			Is the panel builder's responsibility. The specifications for the switchgear must be observed.
10.13 Mechanical function			The device meets the requirements, provided the information in the instruction leaflet (IL) is observed.

Technical data ETIM 7.0

Sensors (EG000026) / End switch (EC000030)			
Electric engineering, automation, process control engineering / Binary sensor technology, safety-related sensor technology / Position switch / Position switch (Type 1) (ecl@ss10.0.1-27-27-06-01 [AGZ382015])			
Width sensor		mm	31
Diameter sensor		mm	0
Height of sensor		mm	61
Length of sensor		mm	33.5
Rated operation current Ie at AC-15, 24 V		A	6
Rated operation current Ie at AC-15, 125 V		A	6
Rated operation current Ie at AC-15, 230 V		A	6
Rated operation current Ie at DC-13, 24 V		A	3
Rated operation current Ie at DC-13, 125 V		A	0.8
Rated operation current Ie at DC-13, 230 V		A	0.3
Switching function			Slow-action switch
Switching function latching			No
Output electronic			No
Forced opening			Yes
Number of safety auxiliary contacts			1
Number of contacts as normally closed contact			1
Number of contacts as normally open contact			1
Number of contacts as change-over contact			0
Type of interface			None
Type of interface for safety communication			None
Construction type housing			Cuboid
Material housing			Plastic
Coating housing			Other
Type of control element			Roller cam
Alignment of the control element			Other
Type of electric connection			Other
With status indication			No
Suitable for safety functions			Yes
Explosion safety category for gas			None
Explosion safety category for dust			None
Ambient temperature during operating		°C	25 - 70

Degree of protection (IP)		IP67
Degree of protection (NEMA)		4X

Approvals

Product Standards		IEC/EN 60947-5; UL 508; CSA-C22.2 No. 14; CE marking
UL File No.		E29184
UL Category Control No.		NKCR
CSA File No.		12528
CSA Class No.		3211-03
North America Certification		UL listed, CSA certified
Degree of Protection		IEC: IP66, 67, UL/CSA Type 3R, 4X (indoor use only), 12, 13

Dimensions

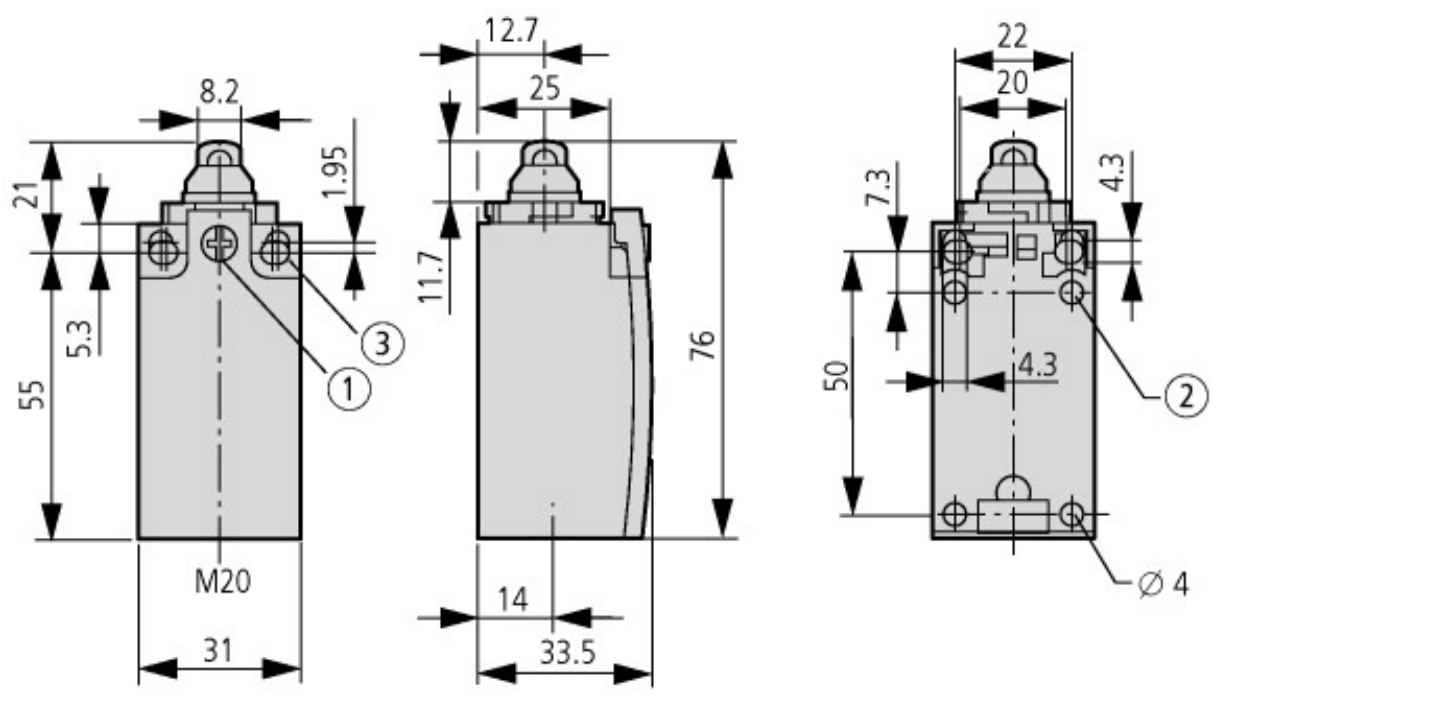

① Tightening torque Cover screw: 0.8 Nm ±0.2 Nm
② only with LS (insulated version)
③ Fixing screw 2 x M4 ≧ 30
M_A = 1.5 Nm

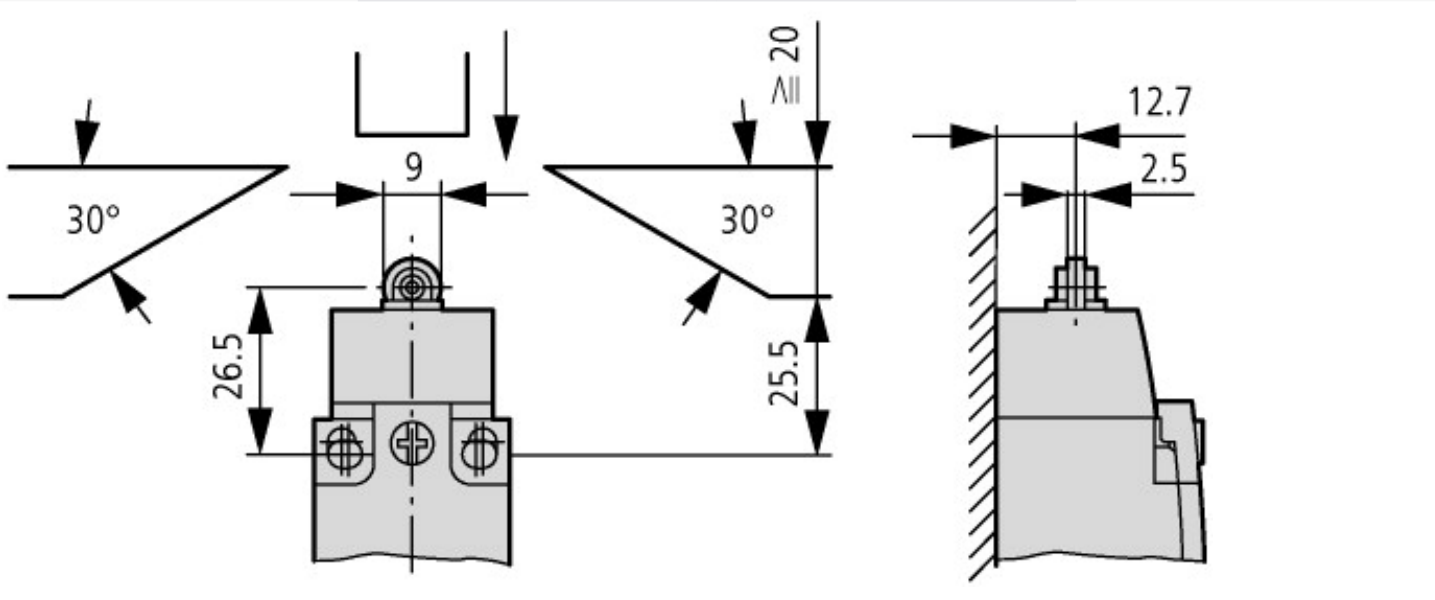

Additional product information (links)

IL053001ZU LS-Titan position switch: basic device	
IL053001ZU LS-Titan position switch: basic device	ftp://ftp.moeller.net/DOCUMENTATION/AWA_INSTRUCTIONS/IL053001ZU2018_06.pdf

© 03/2019 by Eaton Industries GmbH