DATASHEET - N-P3E

Neutral conductor, switched neutral, for P3

Part no. N-P3E
Catalog No. 062432

EL-Nummer (Norway) 0001456528

Delivery program

Basic function			neutral conductor
Function			Switched neutrals
			The N contact always behaves as an early-make contact when switching on and as a late-break contact when switching off. N-P1(P3)… switching capacity same as for contacts P1(P3)-… For left or right side mounting
For use with			P3-…/E, …/EA…
For use with			Flush mounting
Terminal capacities			
Stripping length		mm	13.5

Notes in combination with P3-100…: I_U = max. 90 A

Design verification as per IEC/EN 61439

Technical data for design verification			
Rated operational current for specified heat dissipation	I_n	A	100
Heat dissipation per pole, current-dependent	P_{vid}	W	7.5
Equipment heat dissipation, current-dependent	P_{vid}	W	0
Static heat dissipation, non-current-dependent	P_{vs}	W	0
Heat dissipation capacity	P_{diss}	W	0
Operating ambient temperature min.		°C	-25
Operating ambient temperature max.		°C	50
IEC/EN 61439 design verification			
10.2 Strength of materials and parts			
10.2.2 Corrosion resistance			Meets the product standard's requirements.
10.2.3.1 Verification of thermal stability of enclosures			Meets the product standard's requirements.
10.2.3.2 Verification of resistance of insulating materials to normal heat			Meets the product standard's requirements.
10.2.3.3 Verification of resistance of insulating materials to abnormal heat and fire due to internal electric effects			Meets the product standard's requirements.
10.2.4 Resistance to ultra-violet (UV) radiation			Meets the product standard's requirements.
10.2.5 Lifting			Does not apply, since the entire switchgear needs to be evaluated.
10.2.6 Mechanical impact			Does not apply, since the entire switchgear needs to be evaluated.
10.2.7 Inscriptions			Meets the product standard's requirements.
10.3 Degree of protection of ASSEMBLIES			Does not apply, since the entire switchgear needs to be evaluated.
10.4 Clearances and creepage distances			Meets the product standard's requirements.
10.5 Protection against electric shock			Does not apply, since the entire switchgear needs to be evaluated.
10.6 Incorporation of switching devices and components			Does not apply, since the entire switchgear needs to be evaluated.
10.7 Internal electrical circuits and connections			Is the panel builder's responsibility.
10.8 Connections for external conductors			Is the panel builder's responsibility.
10.9 Insulation properties			
10.9.2 Power-frequency electric strength			Is the panel builder's responsibility.
10.9.3 Impulse withstand voltage			Is the panel builder's responsibility.
10.9.4 Testing of enclosures made of insulating material			Is the panel builder's responsibility.
10.10 Temperature rise			The panel builder is responsible for the temperature rise calculation. Eaton will provide heat dissipation data for the devices.
10.11 Short-circuit rating			Is the panel builder's responsibility. The specifications for the switchgear must be observed.
10.12 Electromagnetic compatibility			Is the panel builder's responsibility. The specifications for the switchgear must be observed.

10.13 Mechanical function			The device meets the requirements, provided the information in the instruction leaflet (IL) is observed.

Technical data ETIM 7.0

Low-voltage industrial components (EG000017) / Accessories for low-voltage switch technology (EC002498)			
Electric engineering, automation, process control engineering / Low-voltage switch technology / Component for low-voltage switching technology / Component for low-voltage switch technology (accessories) (ecl@ss10.0.1-27-37-13-92 [AKN570013])			
Type of accessory			4th pole

Approvals

Product Standards			UL 508; CSA-C22.2 No. 14-05; CSA-C22.2 No. 94; IEC/EN 60947-3; CE marking
UL File No.			E36332
UL Category Control No.			NLRV
CSA File No.			12528
CSA Class No.			3211-05
North America Certification			UL listed, CSA certified

Dimensions

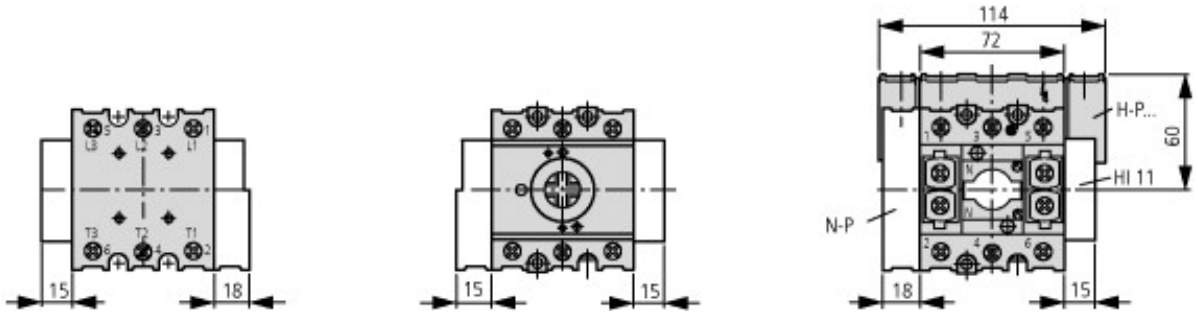

Assets (links)

Instruction Leaflets

IL03802002Z2018_05

Additional product information (links)

IL03802002Z (AWA1150-1690) Switch-disconnectors for flush mounting	
IL03802002Z (AWA1150-1690) Switch-disconnectors for flush mounting	ftp://ftp.moeller.net/DOCUMENTATION/AWA_INSTRUCTIONS/IL03802002Z2018_05.pdf
Technical overview cam switch, switch-disconnector	http://de.ecat.moeller.net/flip-cat/?edition=HPLTEv1&startpage=4.2
System overview cam switch T	http://de.ecat.moeller.net/flip-cat/?edition=HPLTEv1&startpage=4.4
System overview switch-disconnector P	http://de.ecat.moeller.net/flip-cat/?edition=HPLTEv1&startpage=4.6
Key to part numbers Cam switch	http://de.ecat.moeller.net/flip-cat/?edition=HPLTEv1&startpage=4.8
Key to part numbers Switch-disconnector	http://de.ecat.moeller.net/flip-cat/?edition=HPLTEv1&startpage=4.8
Switches for ATEX	http://www.coopercrouse-hinds.eu/en/products/25-ex-safety-and-main-current-switches.html

© 05/2019 by Eaton Industries GmbH